RSGD

Three phase AC motor soft starter

Benefits

- **Easy to use.** The RSGD is equipped with a self-learning algorithm that automatically adjusts the start parameters to optimise the motor starts and stops.
- **Fast installation and set-up.** Only 3 settings are required (FLC, ramp-up and ramp-down).
- **Compact dimensions.** 12 - 45 Arms in 45 mm wide housing, 55 - 100 Arms in 75 mm wide housing.
- **Integrated protection.** Diagnostic functions provide additional protection. RSGD is also equipped with an overload protection (Class 10).*
- **Torque control during ramp-down.** Smoother deceleration of the load.
- **Complete monitoring.** The RSGD is equipped with a Modbus/RTU communication port by 2-wire RS485 connection.**
- **Guided model selection.** Easy to use selection tool to select the appropriate soft starter model depending on the application type.

Description

RSGD is an extremely compact and easy to use 3-phase soft starter for AC induction motors rated up to 100 Arms. The starting parameters can be easily set-up through 3 selector switches.
The integrated motor overload protection (Class 10)* and Modbus communication** result in a higher installation flexibility.

Applications

RSGD soft starters are the ideal solution for 3-phase fixed speed AC induction motor applications where there is the need to reduce the starting current and/or minimise stresses on the motor during start and stop.
The RSGD offers a number of integrated diagnostic functions that can replace additional components inside the electrical panel.
Typical applications include: compressors, pumps and fans.

Main functions

- Soft starting and soft stopping of AC motors.
- Integrated electronic overload protection (Class 10)*.
- Serial communication (Modbus) over RS485**.

* RSGD VD210, VD210C, VX210, VX210C, VX310C, VX311C models only,
** RSGD VD210C, VX210C, VX310C, VX311C models only.

References

Order code

RSGD □□□V□□□□□

Enter the code entering the corresponding option instead of □ .

Code	Option	Description	Notes
R	-		
S	-	Soft starter	
G	-	General purpose	
D	-	Dual phase control	
□	40	220 – 400 VAC +10% -15% operational voltage (Ue)	
	60	220 – 600 VAC +10% -15% operational voltage (Ue)	
□	12	12 Arms	Rated operational current @ 40 °C
	16	16 Arms	
	25	25 Arms	
	32	32 Arms	
	45	45 Arms	
	55	55 Arms	
	70	70 Arms	
	85	85 Arms	
	100	100 Arms	
□	E0	110 - 400 VAC +10% -15% control voltage (Uc) Supply voltage: internally supplied	RSGD40 only
	F0	24 VAC/DC +10% -10% control voltage (Uc) Supply voltage: internally supplied	
	FF	24 VAC/DC +10% -10% control/supply voltage Supply voltage: externally supplied	RSGD60 models from 55 Arms to 100 Arms only
	GG	100 - 240 VAC +10% -15% control/supply voltage Supply voltage: externally supplied	RSGD60 only
V	-		
□	D	No heatsink	RSGD 45 mm only
	X	With heatsink	
□	2	2 relay outputs	RSGD 45 mm only
	3	3 relay outputs	RSGD 75 mm only
□	1	With integrated motor overload protection (Class 10)	
	0	Without motor overload protection	RSGD 45 mm only
□	1	With fan	RSGD 100 Arms only
	0	No fan	
□	-	Without communication	RSGD 45 mm only
	C	With Modbus communication	

Selection guide

	Operational voltage: 400 VAC		Operational voltage: 600 VAC	
Rated operational current (Ie)	**Control voltage 110 - 400 VAC**	**Control voltage 24 VAC/DC**	**Control / supply voltage 100 - 240 VAC**	**Control / supply voltage 24 VAC/DC**
12 Arms	RSGD4012E0VD200 RSGD4012E0VD210 RSGD4012E0VD210C	RSGD4012F0VD200 RSGD4012F0VD210 RSGD4012F0VD210C	RSGD6012GGVD210 RSGD6012GGVD210C	-
16 Arms	RSGD4016E0VD200 RSGD4016E0VD210 RSGD4016E0VD210C	RSGD4016F0VD200 RSGD4016F0VD210 RSGD4016F0VD210C	RSGD6016GGVD210 RSGD6016GGVD210C	-
25 Arms	RSGD4025E0VD200 RSGD4025E0VX210 RSGD4025E0VX210C	RSGD4025F0VD200 RSGD4025F0VX210 RSGD4025F0VX210C	RSGD6025GGVX210 RSGD6025GGVX210C	-
32 Arms	RSGD4032E0VD200 RSGD4032E0VX210 RSGD4032E0VX210C	RSGD4032F0VD200 RSGD4032F0VX210 RSGD4032F0VX210C	RSGD6032GGVX210 RSGD6032GGVX210C	-
45 Arms	RSGD4045E0VX200 RSGD4045E0VX210 RSGD4045E0VX210C	RSGD4045F0VX200 RSGD4045F0VX210 RSGD4045F0VX210C	RSGD6045GGVX210 RSGD6045GGVX210C	-
55 Arms	RSGD4055E0VX310C	RSGD4055F0VX310C	RSGD6055GGVX310C	RSGD6055FFVX310C
70 Arms	RSGD4070E0VX310C	RSGD4070F0VX310C	RSGD6070GGVX310C	RSGD6070FFVX310C
85 Arms	RSGD4085E0VX310C	RSGD4085F0VX310C	RSGD6085GGVX310C	RSGD6085FFVX310C
100 Arms	RSGD40100E0VX311C	RSGD40100F0VX311C	RSGD60100GGVX311C	RSGD60100FFVX311C

Further reading

Information	Where to find it	
RSGD 45 mm instruction manual	http://cga.pub/?eb523b	
RSGD 75 mm instruction manual	http://cga.pub/?aa922f	
RSGD troubleshooting guide	http://cga.pub/?a92131	
RSGD 45 mm Modbus communication protocol	http://cga.pub/?41562d	
RSGD 75 mm Modbus communication protocol	http://cga.pub/?2fe6d0	
RSGD 45 mm Monitor software	http://cga.pub/?6f9b0c	
RSGD 75 mm Configuration software	http://cga.pub/?e4fb5a	
RS-USB driver	http://cga.pub/?f3bda2	
RSGD 45 mm CAD drawings	http://cga.pub/?0bdae1	
RSGD 75 mm CAD drawings	http://cga.pub/?0f0b10	

Selection guide and typical application settings

Category	Type	Trip Class	Ramp-up setting [s]	Ramp-down setting [s]
Compressors	Scroll compressor	5	1	0
	Screw compressor	5	2 to 5	0
	Piston compressor	5	2	0
	Centrifugal compressor	10	10	0
Pumps	Hydraulic pump	5	2	0
	Centrifugal pump (start time <10sec)	5	5 to 10	10
	Centrifugal pump (start time >10sec)	10	10 to 20	15
	Piston pump	10	5 to 10	0
Fans	Centrifugal fan (<0.5m diameter)	10	5 to 10	0
	Centrifugal fan (>0.5m diameter)	20	15 to 30*	0
	Vacuum blowers	10	5 to 10	0
Feeders	Screw feeder	10	2 to 10	0
	Auger	10	5 to 10	0
Rotating machinery	Agitators	10	5 to 15	0
	Mixers	10	5 to 10	0
	Saws (<0.5m diameter)	10	5 to 10	5
	Saws (>0.5m diameter)	20	15 to 30*	10
	Grinder	20	15 to 30*	0
	Crusher	30	20 to 30*	0
	Conveyors	10	5 to 10	5

Note: when using the RSGD on high inertia loads (Trip Class 20, 30) ensure that enough time is left between starts to allow the RSGD to cool down.

For Class 20 or 30 operation, an external overload device may be required.

* For RSGD 45 mm models set ramp-up time to 20.

Motor FLC [A]	HP Rating @ 230V	Power kW @ 400V	Trip class 5	Trip class 10	Trip class 20	Trip class 30
6	1.5	3	RSGD4012.. VD200 RSGD4012.. VD210 / C	RSGD4012.. VD200 RSGD4012.. VD210 / C	RSGD4025.. VD200 RSGD4012.. VD210 / C	RSGD4025.. VD200 RSGD4012.. VD210 / C
9	2	3.7	RSGD4012.. VD200 RSGD4012.. VD210 / C	RSGD4012.. VD200 RSGD4012.. VD210 / C	RSGD4025.. VD200 RSGD4016.. VD210 / C	RSGD4032.. VD200 RSGD4025.. VX210 / C
12	3	5.5	RSGD4012.. VD200 RSGD4012.. VD210 / C	RSGD4016.. VD200 RSGD4012.. VD210 / C	RSGD4045.. VX200 RSGD4025.. VX210 / C	RSGD4045.. VX200 RSGD4025.. VX210 / C
16	5	7.5	RSGD4016.. VD200 RSGD4016.. VD210 / C	RSGD4025.. VD200 RSGD4016.. VD210 / C	RSGD4045.. VX200 RSGD4032.. VX210 / C	RSGD4045.. VX200 RSGD4032.. VX210 / C
22	7.5	11	RSGD4025.. VD200 RSGD4025.. VX210 / C	RSGD4032.. VD200 RSGD4025.. VX210 / C	RSGD4045.. VX200 RSGD4045.. VX210 / C	RSGD4045.. VX200 RSGD4045.. VX210 / C
30	10	15	RSGD4032.. VD200 RSGD4032.. VX210 / C	RSGD4045.. VX200 RSGD4032.. VX210 / C	RSGD4055.. VX310C	RSGD4070.. VX310C
37	10	18.5	RSGD4045.. VX200 RSGD4045.. VX210 / C	RSGD4045.. VX200 RSGD4045.. VX210 / C	RSGD4070.. VX310C	RSGD4085.. VX310C
45	15	22	RSGD4045.. VX200 RSGD4045.. VX210 / C	RSGD4045.. VX200 RSGD4045.. VX210 / C	RSGD4085.. VX310C	RSGD40100.. VX311C
55	20	30	RSGD4055.. VX310C	RSGD4055.. VX310C	RSGD40100.. VX311C	-
70	25	37	RSGD4070.. VX310C	RSGD4070.. VX310C	-	-
85	30	45	RSGD4085.. VX310C	RSGD4085.. VX310C	-	-
100	30	55	RSGD40100.. VX311C	RSGD40100.. VX311C	-	-

- Contact Carlo Gavazzi representative for further information.
- Option “E0”: 110 - 400 VAC or option “F0”: 24 VAC/DC.

Motor FLC [A]	HP rating @ 480 V	HP Rating @ 600 V	Trip class 5	Trip class 10	Trip class 20	Trip class 30
2.7	1.5	2	RSGD6012VD210 / C			
3.9	2	3				
5	3	4				
6	3	5	RSGD6012.. VD210 / C	RSGD6012.. VD210 / C	RSGD6012.. VD210 / C	RSGD6012.. VD210 / C
9	5	7.5	RSGD6012.. VD210 / C	RSGD6012.. VD210 / C	RSGD6016.. VD210 / C	RSGD6025.. VX210 / C
11	7.5	10	RSGD6012.. VD210 / C	RSGD6012.. VD210 / C	RSGD6025.. VX210 / C	RSGD6025.. VX210 / C
16	10	15	RSGD6016.. VD210 / C	RSGD6016.. VD210 / C	RSGD6032.. VX210 / C	RSGD6032.. VX210 / C
22	15	20	RSGD6025.. VX210 / C	RSGD6025.. VX210 /C	RSGD6055.. VX310C	RSGD6055.. VX310C
27	20	25	RSGD6032.. VX210 / C	RSGD6032.. VX210 / C	RSGD6055.. VX310C	RSGD6055.. VX310C
32	20	30	RSGD6032.. VX210 / C	RSGD6032.. VX210 / C	RSGD6070.. VX310C	RSGD6070.. VX310C
41	30	40	RSGD6045.. VX210 / C	RSGD6045.. VX210 / C	RSGD6085.. VX310C	RSGD6085.. VX310C
52	40	50	RSGD6055.. VX310C	RSGD6055.. VX310C	RSGD60100.. VX311C	-
70	50	60	RSGD6070.. VX310C	RSGD6070.. VX310C	-	-
85	60	75	RSGD6085.. VX310C	RSGD6085.. VX310C	-	-
100	75	100	RSGD6085.. VX310C	RSGD60100.. VX311C	-	-

- Contact Carlo Gavazzi representative for further information.
- Option “GG”: 100 - 240 VAC or option “FF”: 24 VAC/DC.

Note: Option FF available only for RSGD 75 mm models
Caution: the actual motor amps may be higher or lower than the average values listed above. We suggest to use the actual motor current as listed on the motor nameplate. Use this table as a guide only.

Carlo Gavazzi compatible components

Purpose	Component name / code	Notes
Manual motor starters	GMS-32 ☐ - ☐ GMS-63 ☐ - ☐ GMS-100 ☐ - ☐	☐: S: standard H: high breaking capacity
Finger guards	RFCG X6	6 pcs per box
Cooling fan	RFAN-75-40 12 X1	For RSGD..100 only Rated voltage : 12 VDC Power consumption: 0.6 W
PC interface cable (Isolated USB to TTL cable)	RS-USB	For RSGD..12 to RSGD..45 only

Structure

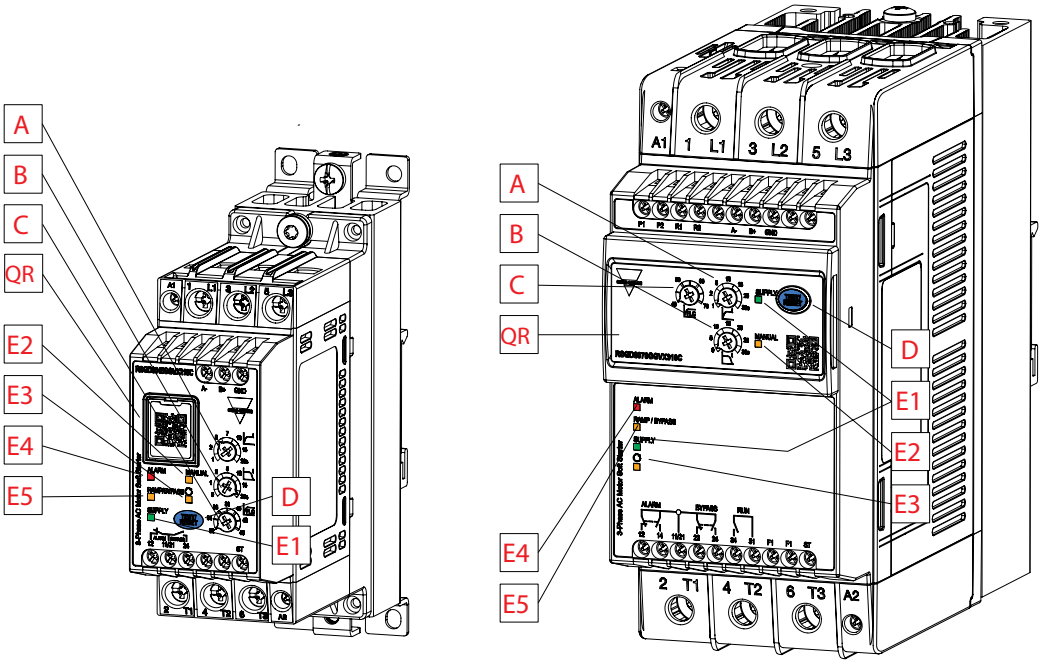

Element	Component	Function
A	Ramp-up time selector	Sets the desired motor starting time.
B	Ramp-down time selector	Sets the desired motor stopping time.
C	FLC knob selector	Sets the motor full load current (FLC). The FLC is setting is used by the RSGD for the overload protection and for the maximum current allowed during motor start.
D	Test/Reset	Simulate overload alarm (press for 1 sec when RSGD is in Idle state) * The alarm recovery mode needs to be set to manual. Enable/disable dry-run function (press for 3 sec when RSGD is in Idle state) Set Manual/Automatic alarm recovery mode (press for 5 sec when RSGD is in Idle state) Enable/disable overload function (press for 8 sec when RSGD is in Idle state)* Reset alarms (press for < 1 sec when RSGD is in alarm mode and alarm mode is Manual) Enable/disable phase sequence protection (press for 10 sec when RSGD is in Idle state) Note: While the Test/Reset button is pressed the LED E5 will start flashing with a frequency of 1 Hz (1/sec) in order to help the user count the number of seconds elapsed.
E1	LED indicators	Supply. Indicates that the RSGD supply is ON.
E2	LED indicators	Manual. Indicates the alarm reset mode. Manual reset mode - LED ON, Auto reset mode - LED OFF (Factory default setting: Auto, LED OFF)
E3	LED indicators	Phase sequence. Indicates if the wrong phase sequence protection is enabled (LED OFF) or disabled (LED ON). (Factory default setting: Enabled, LED OFF)
E4	LED indicators	Alarm. Indicates that the RSGD is in alarm. The number of flashes indicates the alarm type.
E5	LED indicators	Ramping/bypass. Indicates whether RSGD is in ramping (flashing) or bypass (fully ON). Note: Ramping (no HP): 2 Hz flashing. Ramping (with HP): 10 Hz flashing
QR	QR code	Scan to link to troubleshooting guide.

* VD210, VX210, VD210C, VX210C models only.

Mode of operation

The RSGD series of soft starters works on two distinct self-learning algorithms depending on the ramp-up time settings.

Ramp-up	Mode of operation
1 or 2 seconds	• When the ramp-up knob is in position 1 or 2, the RSGD will follow a self learning current limit algorithm. • As soon as A1-A2 (or ST for RSGD60 models) control voltage signal is applied, the RSGD will start to ramp-up the motor. • At the very first start the current limit will be 4 x FLC setting. • In the subsequent starts, the RSGD will automatically adjust the current limit setting to maintain the motor start time as close as possible to the ramp-up time setting.
≥ 5 seconds	• When the ramp-up knob is in position 5 or above, the RSGD will follow a self-learning current ramp algorithm. • The RSGD will start with a set of default parameters for starting torque. • Depending on the ramp-up time setting, the RSGD will apply a current ramp algorithm to start the motor as close as possible to the set ramp-up time. • During the motor start, the current will be limited to a maximum of 3.5 x FLC setting. • In the subsequent starts, the RSGD will continue to adjust the starting parameters of initial torque and current ramp to ensure that the motor is started as close as possible to the set ramp-up time.
HP mode of operation	• During the ramp-up sequence, the RSGD will check if the motor is rotating. • If the RSGD detects that the motor is in locked rotor condition as soon as control is applied and/or the motor has not reached full speed at the set ramp-up time, it will trigger the HP function. • This mode of operation is indicated via a faster flashing sequence on the ramping/bypass LED (E5). • The maximum starting current during HP mode can reach: 4 x Ie for ramp-up setting of 1 or 2 seconds and 3.5 x Ie for ramp-up setting ≥ 5 seconds. • The RSGD will then go in bypass state as soon as it detects that the motor reached full speed.

Ramp-down	Mode of operation
1 to 30 seconds	• During ramp-down, the RSGD works on a torque control algorithm for smoother stopping of the motor. • As soon as the control voltage signal A1-A2 (or ST for RSGD 60 models) is removed, the RSGD will slow down the motor gradually according to the ramp-down setting. • The power semiconductors will be switched OFF as soon as the time (as per ramp-down setting) has elapsed unless there is a risk of exceeding the maximum temperature on the semiconductors. In such a case the RSGD will leave the motor to coast to stop.
0 seconds	• If the ramp-down knob is set to 0, the RSGD will leave the motor to coast to stop (no ramp-down).

Settings

	RSGD 45 mm	RSGD 75 mm
Ramp-up time	1 - 20 s	1 - 30 s
Ramp-down time	0 - 20 s	0 - 30 s
Initial torque	Automatically determined by RSGD	
FLC range settings	RSGD 12: 2 - 12 A RSGD 16: 6 - 16 A RSGD 25: 12 - 25 A RSGD 32: 20 - 32 A RSGD 45: 32 - 45 A	RSGD 55: 25 - 55 A RSGD 70: 40 - 70 A RSGD 85: 55 - 85 A RSGD 100: 70 - 100 A

Features

General

	RSGD 45 mm	RSGD 75 mm
Material	PA66	
Assembly	DIN or panel	
Protection grade	IP20	
Weight	0.5 to 0.75 kg	approx. 2.3 kg
Overvoltage category	Cat. III	

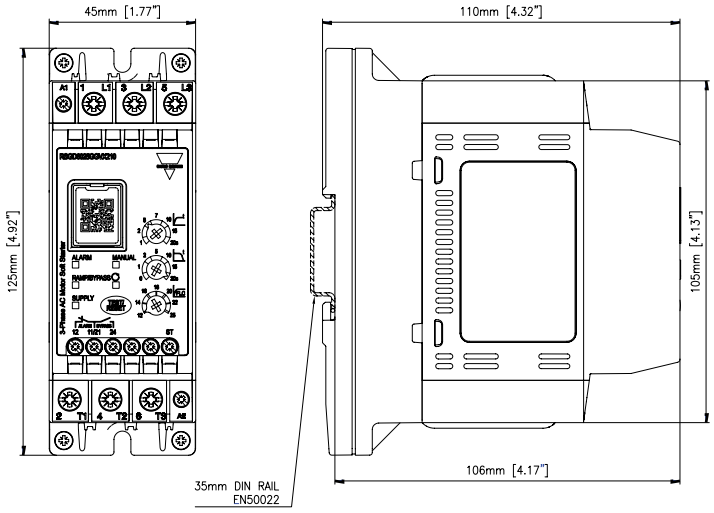

Fig. 1 *RSGD..12..VD200 to RSGD..32..VD200, RSGD..12..VD210/C to RSGD..16..VD210/C*

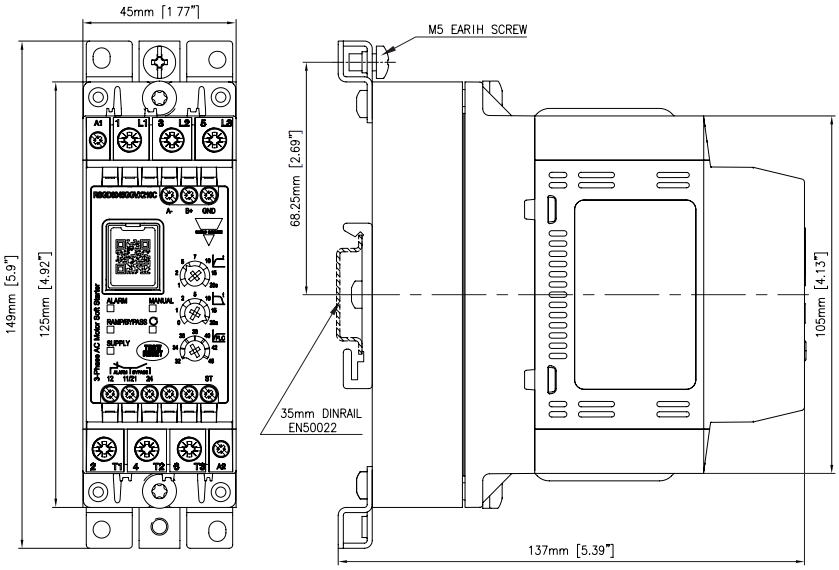

Fig. 2 *RSGD4045..VX200, RSGD..25VX210/C to RSGD..45..VX210/C*

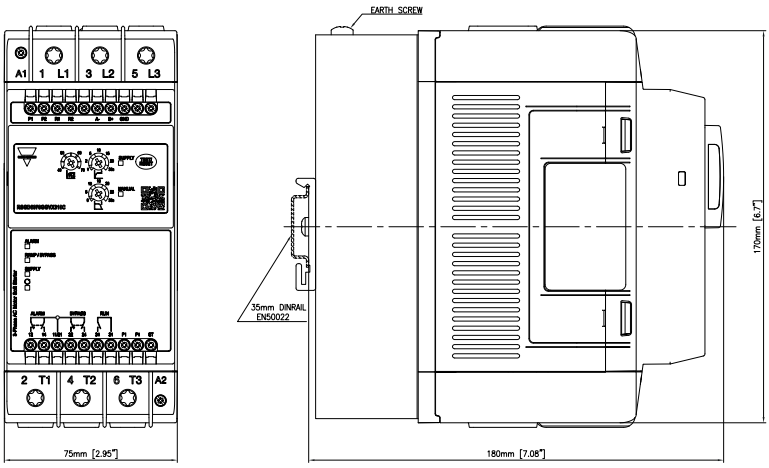

Fig. 3 *RSGD..55..VX310C to RSGD..85..VX310C (DIN rail mount version)*

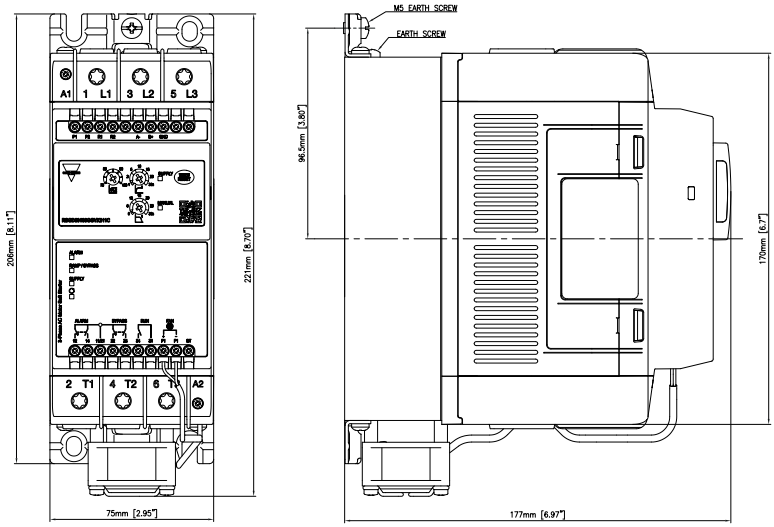

Fig. 4 *RSGD..100..VX311C (panel mount version)*

Power Supply

	RSGD40	RSGD60
Operational voltage range	187 - 440 VACrms	187 - 660 VACrms
Supply current at Idle	< 30 mArms	
Blocking voltage	1200 Vp	1600 Vp
Rated AC frequency	50/60 Hz (+/- 10%)	
Rated insulation voltage	600 VAC	690 VAC
Dielectric withstand voltage: **Supply to input** **Supply to heatsink**	 2.5 kVrms 2.5 kVrms	
Integrated varistor	Yes (across controlled phases)	

Inputs

	RSGD40..E0V	RSGD40..F0V	RSGD60..FFV	RSGD60..GGV
Control voltage (Uc)	A1 - A2: 110 - 400 VAC +10%, -15%	A1 - A2: 24 VAC/VDC +10%, -10%	ST: 24 VAC/VDC +10%, -15%	ST: 100 - 240 VAC +10%, -15%
Control voltage range (Uc)	93.5 - 440 VAC	21.6 - 26.4 VAC/DC	21.6 - 26.4 VAC/DC	85 - 264 VAC
Maximum pick-up voltage	80 VAC	20.4 VAC/DC	20.4 VAC/DC	80 VAC
Minimum drop out voltage	20 VAC	5 VAC/DC	5 VAC/DC	20 VAC
Supply voltage range (Us)	-	-	A1 - A2: 24 VAC/DC +10%, -10%	A1 - A2: 100 - 240 VAC +10%, -15%
Rated AC frequency	45 - 66 Hz	45 - 66 Hz (applies to 24 VAC supply)		45 - 66 Hz
Rated insulation voltage (Ui)	500 VAC			
Dielectric strength: **Dielectric withstand voltage** **Rated impulse withstand voltage**	 2 kVrms 4 kVrms			
Control input current	0.5 - 5 mArms (0.55 - 1.3 mArms for RSGD 45mm)	0.4 - 1 mArms	0.5 - 1.5 mArms	0.4 - 3 mArms
Input to output response time (Mains supply already present)	200 msec			
Input to output response time (Mains supply applied with control)	2 sec		3 sec	
Integrated varistor	Yes			

Note 1: for the Canadian application, the control terminals A1, A2 (or A1, A2, ST for RSGD60 versions) of the RSGD devices shall be supplied by a secondary circuit where power is limited by a transformer, rectifier, voltage divider, or similar device that derives power from a primary circuit, and where the short-circuit limit between conductors of the secondary circuit or between conductors and ground is 1500VA or less. The short-circuit volt ampere limit is the product of the open circuit voltage and the short circuit ampere.

Note 2: RSGD60 soft starters require a separate 100 - 240V, 50/60Hz single phase control source. Output connections (L1, L2, L3, T1, T2, T3) are not galvanically isolated from the external supply connections (A1, A2, ST).

Note 3: For the RSGD60 versions the L1, L2, L3 voltage should be applied before or within 250ms from when the control signal ‘ST’ is applied.

Outputs

	RSGD..12	RSGD..16	RSGD..25	RSGD..32	RSGD..45
Overload cycle @ 40°C surrounding temperature (acc. to EN/IEC 60947-4-2)	VD200: 3-5:175 VD210: 3-12:168		VD200:3-5:355 VX210:3-12:168	VD200:3-5:175 VX210:3-12:168	3-12:348
Maximum number of starts/hr @ rated overload cycle @ 40°C surrounding temperature	20		VD200: 10 VX210: 20	20	10
Maximum number of starts/hr (with fan) @ rated overload cycle @ 40°C surrounding temperature	-	-	-	-	-
Rated operational current @ 40°C	12 Arms	16 Arms	25 Arms	32 Arms	45 Arms*
Rated operational current @ 50°C	12 Arms	15 Arms	23 Arms	28 Arms	40 Arms
Rated operational current @ 60°C	12 Arms	13 Arms	21 Arms	24 Arms	34 Arms
Minimum load current	1 Arms			5 Arms	

	RSGD..55	RSGD..70	RSGD..85	RSGD..100
Overload cycle @ 40°C surrounding temperature (acc. to EN/IEC 60947-4-2)	AC53b : 3 - 12 : 348			
Maximum number of starts/hr @ rated overload cycle @ 40°C surrounding temperature	10			
Maximum number of starts/hr (with fan) @ rated overload cycle @ 40°C surrounding temperature	-	-	-	10
Rated operational current @ 40°C	55 Arms	70 Arms	85 Arms	100 Arms
Rated operational current @ 50°C	50 Arms	64 Arms	78 Arms	88.5 Arms
Rated operational current @ 60°C	46 Arms	59 Arms	71 Arms	77 Arms
Minimum load current	5 Arms			

Note: the overload cycle describes the switching capability of the soft starter at a surrounding temperature of 40°C as described in EN/IEC 60947-4-2. An overload cycle AC53b:3-12:348 means that the soft starter can handle a starting current of 3x Ie for 12 seconds followed by an OFF time of 348 seconds.

* For RSGD6045 models, operational current is 45 Arms @ 25°C.

Auxiliary relays

	RSGD 45 mm	RSGD 75 mm
Number of output relays	2	3
Function of relays	Alarm, bypassed (top of ramp).	Alarm, bypassed (top of ramp), run.
Rated operational voltage	250 VAC/30 VDC	
Rated insulation voltage	250 VAC	
Dielectric withstand voltage	2.5 kV	
Overvoltage category	II	
Type of control circuit	Electromechanical relay	
Number of contacts	Alarm and bypassed: 1	Alarm and bypassed: 2 Run: 1
Type of contacts	Alarm: normally closed (NC) Bypassed: normally open (NO)	Alarm and bypassed: changeover (NO, NC) Run: normally open (NO)
Type of current	AC / DC	
Rated operational current	3 Arms @ 250 VAC, 3 Arms @ 30 VDC	

RS485

Type	Bi-directional (static and dynamic variables and parameters)
Functions	Configuration of device Start/Stop Modification of set-point parameters Monitoring of measured variables
Connection	2-wires Note: to reduce the noise use a shielded cable and connect the shield to GND terminal and to the ground at the same point.
Address	Default : 1 Selectable via software: range 1 - 247
Protocol	MODBUS (RTU)
Factory defined data format	Data bits: 8 Parity: none Stop bit: 1 Selectable via software: parity: none (2 stop bits), odd (1 stop bit), even (1 stop bit)
Baud rate	Default: 9.6k bits/s Selectable via software: 9.6k, 19.2k, 38.4k bits/s

Environmental

Working temperature	-20°C to +60°C (-4°F to +140°F). Note: for temperatures > 40°C derating applies.
Storage tempreature	-40°C to +80°C (-40°F to +176°F).
Relative humidity	< 95% non-condensing @ 40°C.
Pollution degree	2
Installation category	III
Installation altitude	1000 m
Vibration **Frequency 1** **Frequency 2**	Acc. to IEC/EN 60068-2-6 2 [+3/-0] Hz to 25 Hz displacement +/- 1.6 mm 10 Hz to 55 Hz @ 2g (19.96m/s^2) @ constant displacement

Compatibility and conformity

Approvals	
Standards compliance	**RSGD 45 mm**
	LVD: EN 60947-4-2:2012 EMCD: EN 60947-4-2:2012 UL: UL 60947-4-2, E172877, NMFT cUL: C22.2 no. CSA C22.2 no. 60947-4-2, E172877, NMFT7 CCC: GB/T 14048.6-2016
	RSGD 75 mm
	LVD: EN 60947-4-2:2012 EMCD: EN 60947-4-2:2012 UL: E172877, NMFT, UL508 cUL: C22.2 no. CSA C22.2 no. 14, E172877, NMFT7 CCC: GB/T 14048.6-2016

Electromagnetic compatibility (EMC) - immunity			
	RSGD 45 mm Standard	**RSGD 45 mm with Modbus**	**RSGD 75 mm**
Electrostatic discharge (ESD) EN/IEC 61000-4-2 8 kV air discharge, 4 kV contact	PC1	PC2	PC2
Radiated radio frequency EN/IEC 61000-4-3 10 V/m, from 80 MHz to 1 GHz 10 V/m, from 1.4 to 2 GHz 3 V/m, from 2 to 2.7 GHz	PC1 PC1 PC1		
Electrical fast transient (burst) EN/IEC 61000-4-4 AC input: 2 kV, 5 kHz & 100 kHz DC input: 1 kV, 5 kHz & 100 kHz Signal: 1 kV, 5 kHz & 100 kHz Control: 2 kV, 5 kHz &100 kHz Output: 2 kV, 5 kHz & 100 kHz	PC1 PC2 PC2 PC2 PC2	PC2 2 kV (PC2) PC2 1 kV (PC2) 4 kV (PC1)	PC2 PC2 PC2 PC2 PC2
Conducted radio frequency EN/IEC 61000-4-6 10 V/m, from 0.15 to 80 MHz	PC2		
Electrical surge, EN/IEC 61000-4-5 Output, line to line: 1 kV Output, line to earth: 2 kV AC input, line to line: 1 kV AC input, line to earth: 2 kV DC input, line to line: 1 kV DC input, line to earth: 2 kV Signal and control, line to earth: 2 kV	PC2 PC1 PC1 PC1 PC2 PC2 PC1	PC2 PC2 PC2 PC1 0.5 kV (PC2) 1 kV (PC2) 1 kV (PC2)	PC2 PC2 PC1 PC1 PC2 PC2 1 kV (PC2)
Voltage dips, EN/IEC 61000-4-11 0% for 10 ms and 20 ms 40% for 100, 200, 1000 ms 70% for 500 ms 80% for 5000 ms 0% for 5000 ms	PC2 PC2 PC2 PC2 PC2	PC2 PC2 PC2 PC3 PC3	PC2 PC2 PC2 PC2 PC2

Electromagnetic compatibility (EMC) - emissions	
Radio interference field emission (radiated)	EN/IEC 55011 Class A (Industrial): from 30 to 1000 MHz
Radio interference voltage emissions (conducted)	EN/IEC 55011 Class A (Industrial): from 0.15 to 30 MHz

Note: the tests were done using a screened cable for the communication lines. PC2 (performance criteria 2): during the test, degradation of performance or partial loss of function is allowed. However, when the test is complete, the product should return operating as intended.

Performance

Current / power ratings: kW and HP @ 40°C

Model	IEC Rated Current	220 - 240 VAC	380 - 415 VAC	440 - 480 VAC	550 - 600 VAC
RSGD..12	12 Arms	3 kW / 3 HP	5.5 kW / 5 HP	5.5 kW / 7.5 HP	9 kW / 10 HP
RSGD..16	16 Arms	4 kW / 5 HP	7.5 kW / 7.5 HP	9 kW / 10 HP	11 kW / 15 HP
RSGD..25	25 Arms	5.5 kW / 7.5 HP	11 kW / 10 HP	11 kW / 15 HP	20 kW / 20 HP
RSGD..32	32 Arms	9 kW / 10 HP	15 kW / 15 HP	18.5 kW / 20 HP	22 kW / 30 HP
RSGD..45*	45 Arms	11 kW / 15 HP	22 kW / 25 HP	22 kW / 30 HP	37 kW / 40 HP
RSGD..55	55 Arms	15 kW / 20 HP	30 kW / 30 HP	30 kW / 40 HP	45 kW / 50 HP
RSGD..70	70 Arms	20 kW / 25 HP	37 kW / 40 HP	45 kW / 50 HP	55 kW / 60 HP
RSGD..85	85 Arms	22 kW / 30 HP	45 kW / 50 HP	45 kW / 60 HP	55 kW / 75 HP
RSGD..100	100 Arms	30 kW / 30 HP	55 kW / 50 HP	55 kW / 75 HP	75 kW / 100 HP

Ratings:
kW rating according to: IEC/EN 60947-4-2
HP rating according to: UL508 (75 mm), UL60947-4-2 (45 mm)
* For RSGD6045 models, ratings are @25°C

Starts per hour

The table below indicates the maximum number of starts/hr that can be done by the different RSGD models at different operating currents with a surrounding temperature of 40°C.

Model	Operational current					
	6 Arms	12 Arms	16 Arms	25 Arms	32 Arms	45 Arms
RSGD..12..VD200	40	20	-	-	-	-
RSGD..16..VD200	50	25	20	-	-	-
RSGD..25..VD200	45	20	15	10	-	-
RSGD..32..VD200	100	55	40	25	20	-
RSGD..45..VX200	80	40	30	18	15	10

Model	Operational current					
	6 Arms	12 Arms	16 Arms	25 Arms	32 Arms	45 Arms
RSGD..12..VD210/C	40	20	-	-	-	-
RSGD..16..VD210/C	50	25	20	-	-	-
RSGD..25..VX210/C	90	40	30	20	-	-
RSGD..32..VX210/C	100	55	40	25	20	-
RSGD..45..VX210/C	80	40	30	18	15	10

Model	Operational current					
	25 Arms	45 Arms	55 Arms	70 Arms	85 Arms	100 Arms
RSGD..55..VX310C	25	13	10	-	-	-
RSGD..70..VX310C	30	16	13	10	-	-
RSGD..85..VX310C	40	21	17	12	10	-
RSGD..100..VX311C	40	22	18	14	12	10

Current derating curves

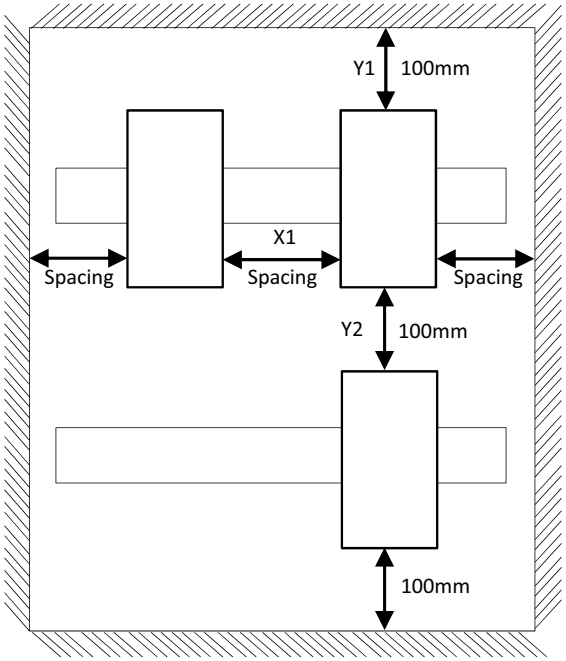

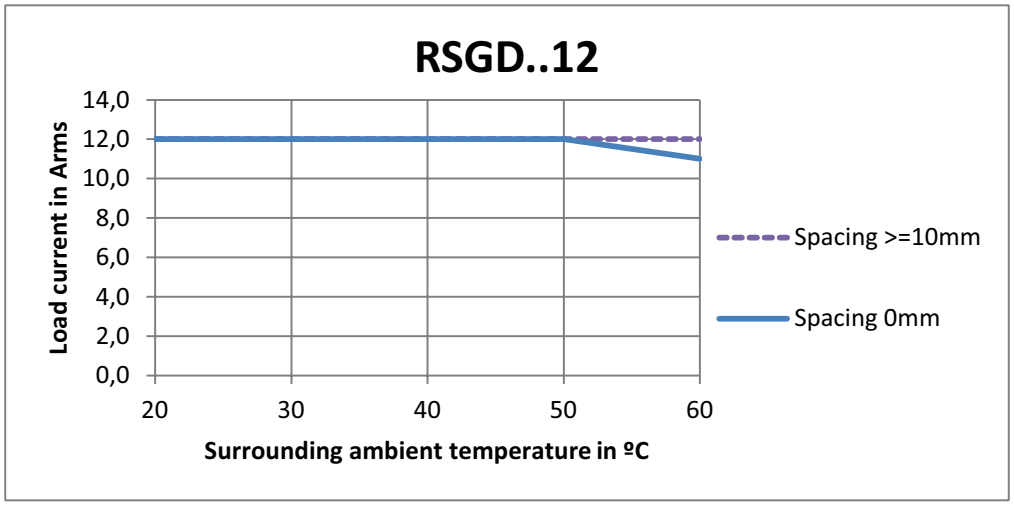

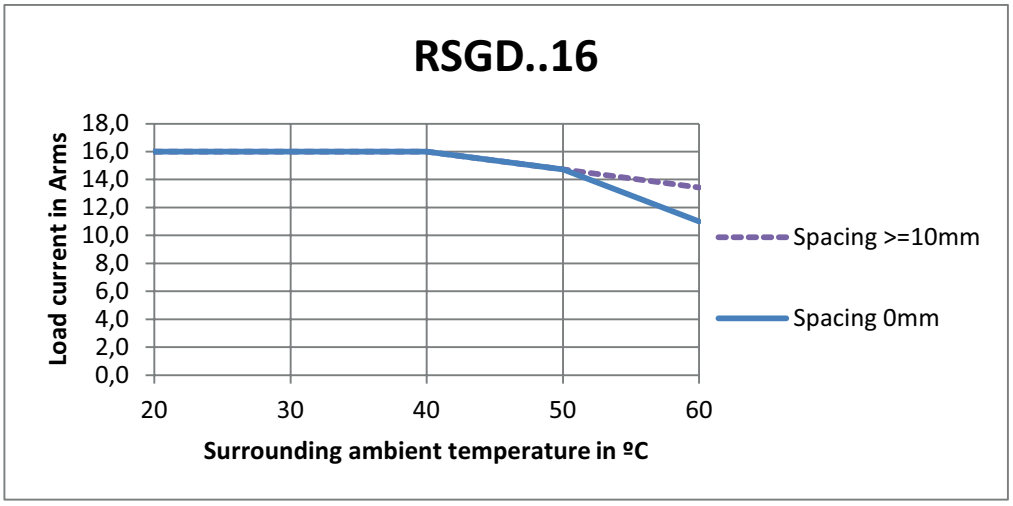
RSGD..16
Load current in Arms
18,0
16,0
14,0
12,0
10,0
8,0
6,0
4,0
2,0
0,0
20
30
40
50
60
Surrounding ambient temperature in ºC
Spacing >=10mm
Spacing 0mm

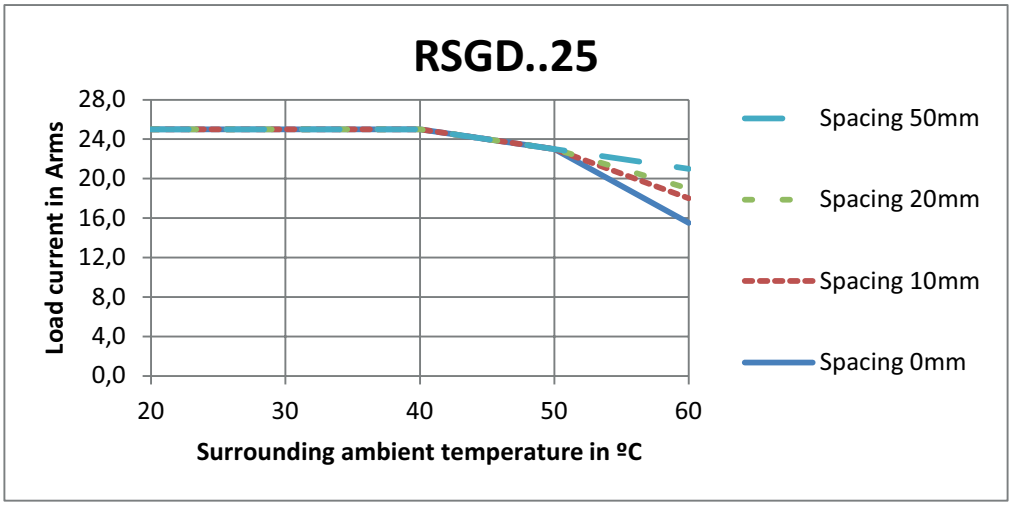
RSGD..25
Load current in Arms
28,0
24,0
20,0
16,0
12,0
8,0
4,0
0,0
20
30
40
50
60
Surrounding ambient temperature in ºC
Spacing 50mm
Spacing 20mm
Spacing 10mm
Spacing 0mm

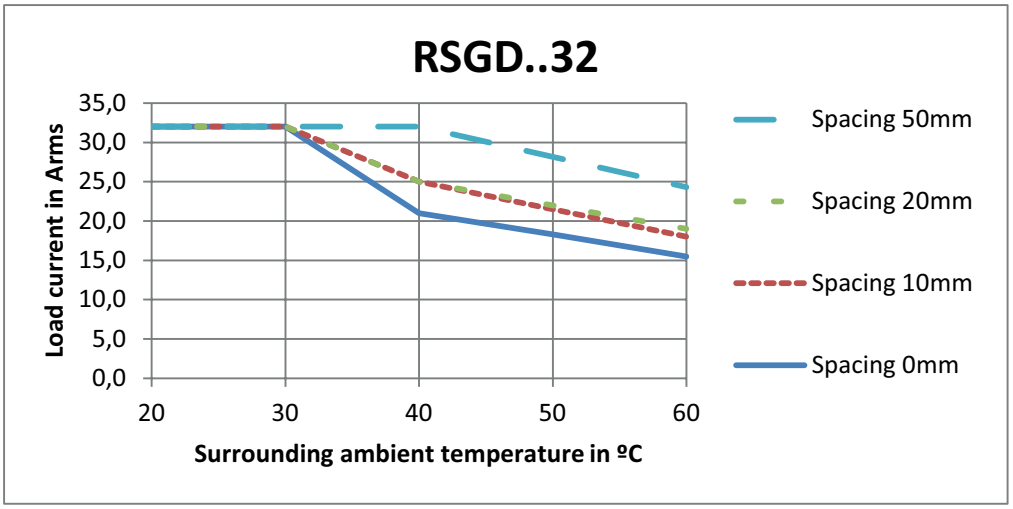
RSGD..32
Load current in Arms
35,0
30,0
25,0
20,0
15,0
10,0
5,0
0,0
20
30
40
50
60
Surrounding ambient temperature in ºC
Spacing 50mm
Spacing 20mm
Spacing 10mm
Spacing 0mm

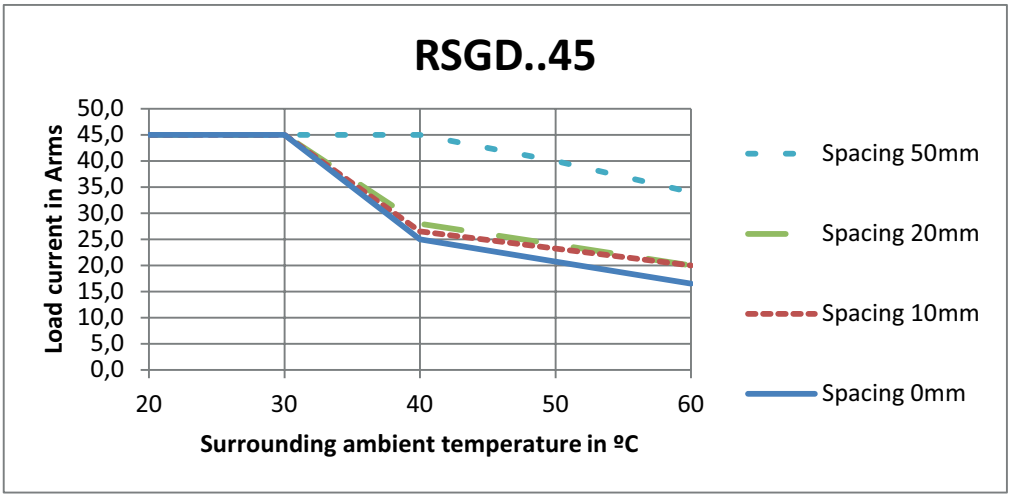
RSGD..45
Load current in Arms
50,0
45,0
40,0
35,0
30,0
25,0
20,0
15,0
10,0
5,0
0,0
20
30
40
50
60
Surrounding ambient temperature in ºC
Spacing 50mm
Spacing 20mm
Spacing 10mm
Spacing 0mm

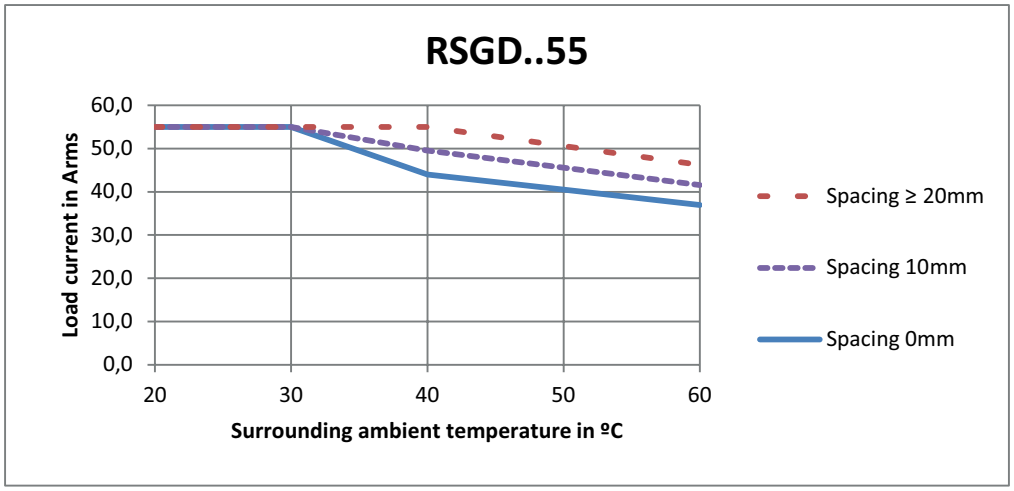
RSGD..55
Load current in Arms
60,0
50,0
40,0
30,0
20,0
10,0
0,0
20
30
40
50
60
Surrounding ambient temperature in ºC
Spacing ≥ 20mm
Spacing 10mm
Spacing 0mm

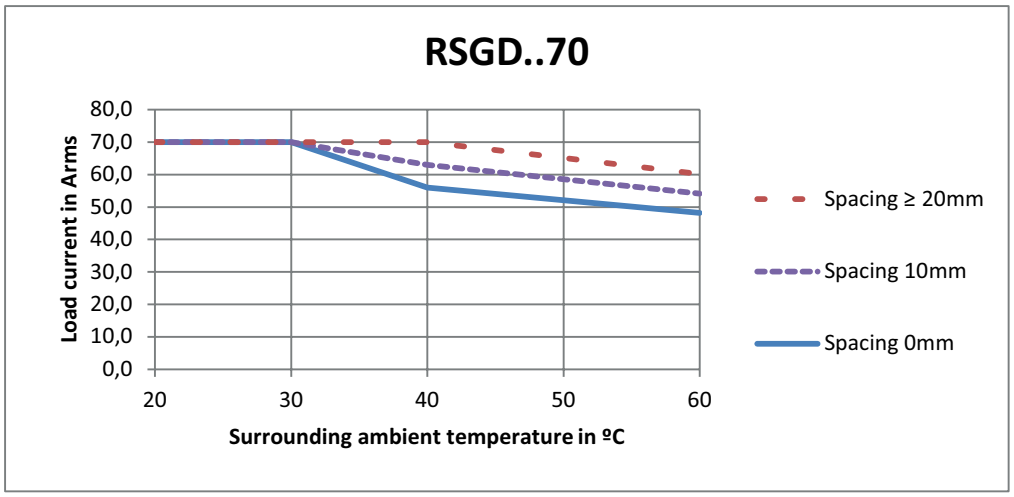
RSGD..70
Load current in Arms
80,0
70,0
60,0
50,0
40,0
30,0
20,0
10,0
0,0
20
30
40
50
60
Surrounding ambient temperature in ºC
Spacing ≥ 20mm
Spacing 10mm
Spacing 0mm

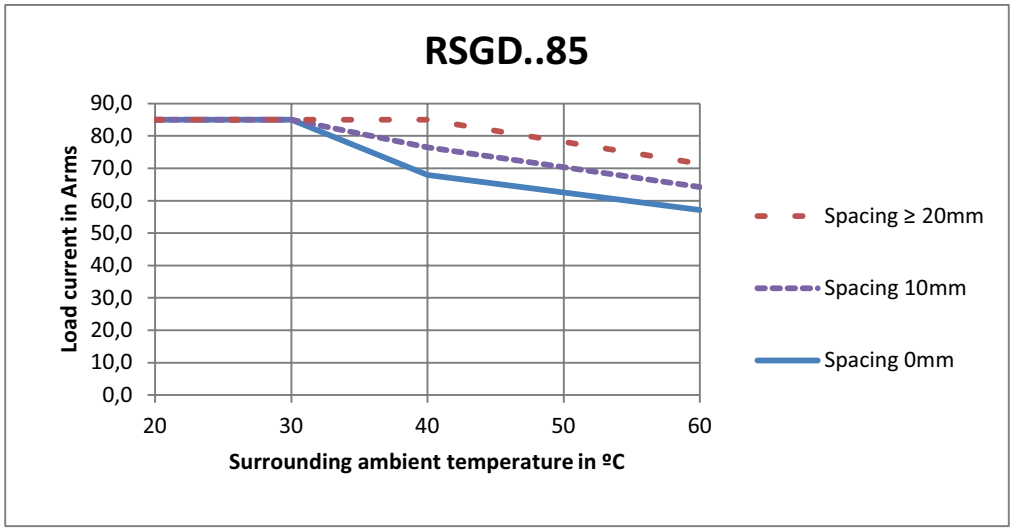

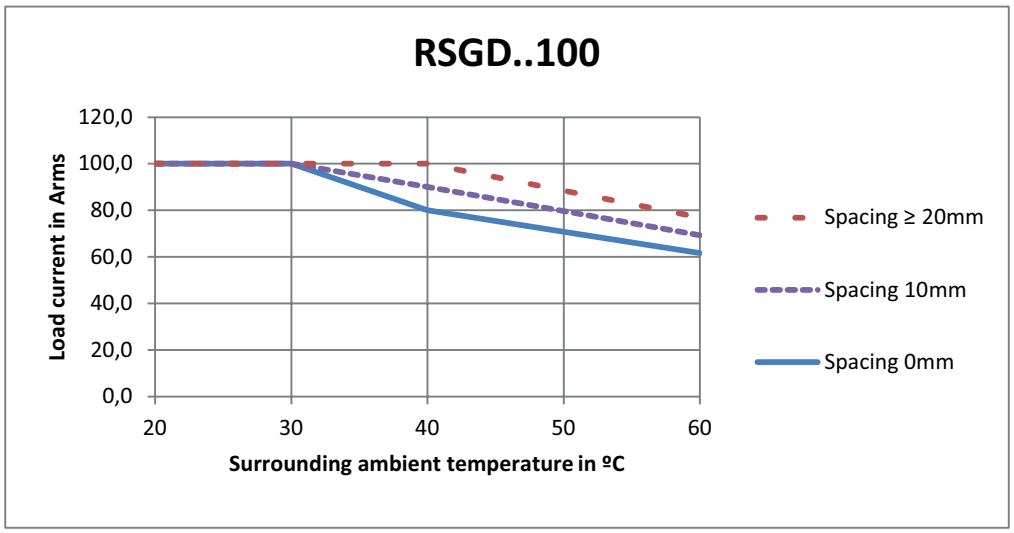

Maximum Power Dissipation at Ie

	RSGD40		RSGD60	
	E0: 110 - 400 VAC	F0: 24 VAC/DC	GG: 100 - 240 VAC	FF: 24 VAC/DC
RSGD..12	20.3 W		6.4 W	-
RSGD..16	20.8 W		6.8 W	-
RSGD..25	21.5 W		7.0 W	-
RSGD..32	22.6 W		13.5 W	-
RSGD..45	23.9 W		16.5 W	-
RSGD..55	19.5 W		16.2 W	3.1 W
RSGD..70	28.4 W		20.0 W	4.5 W
RSGD..85	28.8 W		21.0 W	8.2 W
RSGD..100	29.3 W		22.3 W	8.2 W

Connection Diagrams

Terminal markings

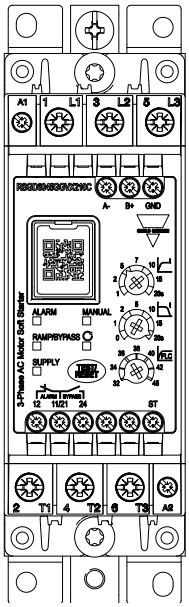

Fig. 5 *RSGD 45 mm*

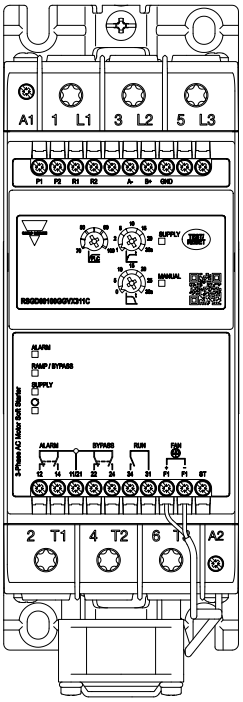

Fig. 6 *RSGD 75 mm*

Note: It is recommended that the power factor correction capacitors be switched out of the circuit during the ramp-up phase of any motor. When the motor being started is in the bypass state (bypass relays closed), the capacitors may be switched back into the circuit. Capacitors may affect the proper operation of the silicon controlled rectifiers (SCRs) if kept in the circuit during the START ramp.

Marking	RSGD 45 mm		RSGD 75 mm	
	RSGD40	RSGD60	RSGD40	RSGD60
1 L1, 3 L2, 5 L3	Line connections			
2 T1, 4 T2, 6 T3	Load connections			
A1, A2	Control voltage	Supply voltage	Control voltage	Supply voltage
ST	-	Control voltage	-	Control voltage
11, 12	Alarm indication (normally closed, NC)			
11, 14	-		Alarm indication (normally open, NO)	
21, 22	-		Top of ramp indication (normally closed, NC)	
21, 24	Top of ramp indication (normally open, NO)			
31, 34	-		Run relay (normally open, NO)	
R1, R2	-		Remote reset of alarms	
P1, P2	-		PTC input	
A - , B + , GND	Modbus connections			
F1+, F1- *	-		Fan connection	
Note:	For the 24VDC (RSGD40..F0, RSGD60..FF) models, connect A1 to the positive (+) and A2 to the negative (-) terminal. * Only for RSGD..100 models.			

Wiring diagrams

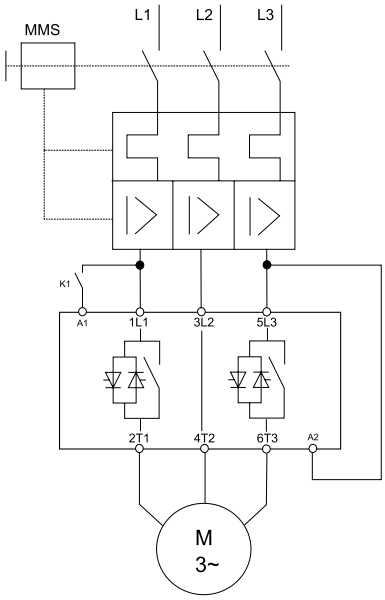

Fig. 7 *RSGD40E0*

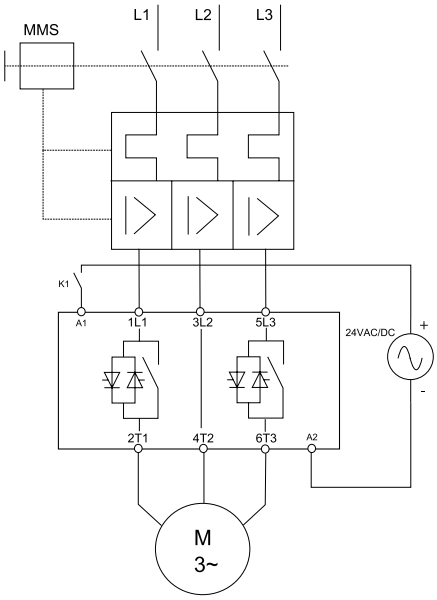

Fig. 8 *RSGD40F0*

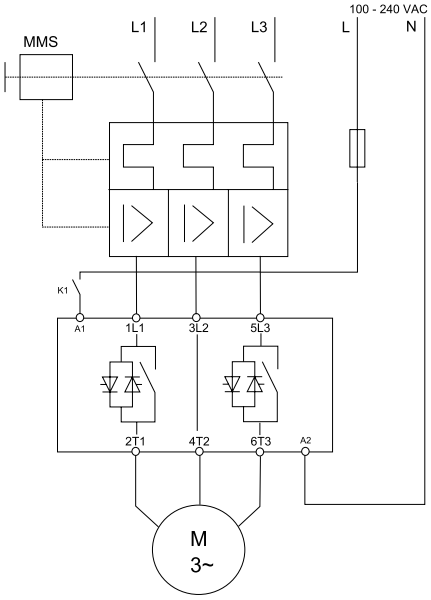

Fig. 9 *RSGD40E0*

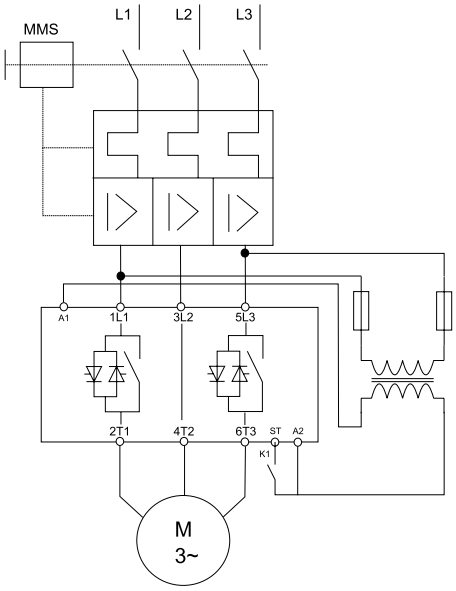

Fig. 10 *RSGD60.*
GG models: Apply 100 - 240 VAC,
FF models: Apply 24 VAC/DC.

Connection specifications

Line conductors 1 L1, 3 L2, 5 L3, 2 T1, 4 T2, 6 T3 (acc. to EN60947-1)		
	RSGD 45 mm	**RSGD 75 mm**
Flexible	2.5 - 10 mm^2 2.5 - 2 x 4 mm^2	-
Rigid (solid or stranded)	2.5 - 10 mm^2	2 x (10 - 50 mm^2)
Flexible with end sleeve (ferrule)	2.5 - 10 mm^2	2 x (10 - 50 mm^2)
UL/cUL rated data **Rigid (solid or stranded)**	2 x (AWG 10 - 14)	2 x (AWG 8 - 1/0)
Terminal screws	M4	M8
Maximum tightening torque	2.5 Nm (22 lb.in) with posidrive bit 2	12 Nm (106 lb.in) with torx TT40 bit
Stripping length	8.0 mm	20.0 mm

Secondary conductors A1, A2 (acc. to EN60998)		
	RSGD 45 mm	**RSGD 75 mm**
Flexible	0.5 - 1.5 mm^2	
Rigid (solid or stranded)	0.5 - 2.5 mm^2	
Flexible with end sleeve (ferrule)	0.5 - 1.5 mm^2	
UL/cUL rated data **Rigid (solid or stranded)**	AWG 10 - 18	
Terminal screws	M3	
Maximum tightening torque	0.6 Nm (5.3 lb.in) with posidrive bit 0	
Stripping length	6.0 mm	

Auxiliary conductors		
	RSGD 45 mm	**RSGD 75 mm**
Rigid (solid or stranded)	0.5 - 2.5 mm^2	
Flexible with end sleeve (ferrule)	0.05 - 1.5 mm^2	
UL/cUL rated data **Rigid (solid or stranded)**	AWG 30 - 32	
Terminal screws	M3	
Maximum tightening torque	0.45 Nm (4.0 lb.in) posidrive bit 0	
Stripping length	6.0 mm	

Use 75ºC Copper (Cu) conductors.

Troubleshooting

LED status indications

State	Supply (green LED)	Ramp/Bypass (yellow LED)	Alarm (red LED)	Manual (yellow LED)
Idle	ON	OFF	OFF	OFF/ON
Ramping	ON	Flashing	OFF	OFF/ON
Bypass	ON	OFF	OFF	OFF/ON
Alarm (Auto-recovery)	ON	OFF	Flashing	OFF
Alarm (Manual recovery)	ON	OFF	Flashing	ON
Internal fault	ON	OFF	ON	OFF/ON

Relay status indication

State	Supply (green LED)	Relay contact position				
		RSGD 45 mm		RSGD 75 mm		
		Alarm (11, 12)	Bypass (21, 24)	Alarm (11, 12, 14)	Bypass (21, 22, 24)	Run (31, 34)
Idle	ON	Closed	Open	11, 12	21, 22	Open
Ramping	ON	Closed	Open	11, 12	21, 22	Closed
Bypass	ON	Closed	Closed	11, 12	21, 24	Closed
Alarm (Auto-recovery)	ON	Open	Open	11, 14	21, 22	Open
Alarm (Manual recovery)	ON	Open	Open	11, 14	21, 22	Open
Internal fault	ON	Open	Open	11, 14	21, 22	Open

Alarms

The RSGD includes a number of diagnostics and protection features each of which is signalled through a flashing sequence on the red LED.

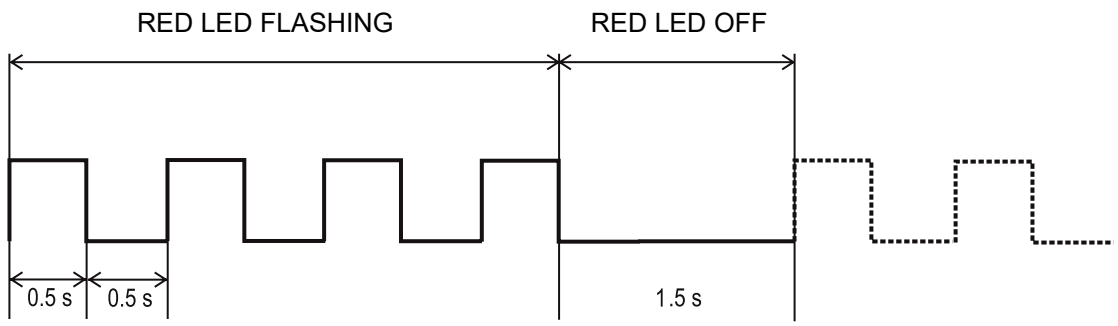

Number of flashes	2
Alarm	Wrong phase sequence
Alarm description	If the connection to the soft starter is not done in the correct sequence (L1, L2, L3), the RSGD will trigger the wrong phase sequence alarm and the motor will not be started.
Alarm recovery period	N/A
Consecutive alarms for hard reset	1
Action to recover alarm	User intervention is required to change the wiring sequence to recover alarm. Note: the phase sequence monitoring can be disabled. To disable the alarm, follow the procedure in the “Structure” section. ATTENTION: in this mode, if the wiring is not in the correct sequence, the motor will rotate in the reverse direction.
Troubleshooting	• Check that wiring on L1, L2, L3 is in the correct sequence. • If you need to reverse the motor, make sure that the phase sequence LED is ON (phase sequence protection disabled).

Number of flashes	3
Alarm	Line voltage out of range
Alarm description	At every power-up the RSGD automatically detects the supply voltage level and determines whether it is working on a 220, 400, 480* or 600* V supply. The under- or over- voltage alarm level is then set at a level of -20% and + 20% (from the measured supply voltage level) respectively. If the supply voltage level is out of these limits for more than 5 seconds then the line voltage out of range alarm will be triggered. * Applies to RSGD60 models. Note: for RSGD60 over-voltage alarm level (for the case of a 600V supply) is 675V (600V + 12.5%).
Alarm recovery period	5 minutes
Consecutive alarms for hard reset	5
Action to recover alarm	The alarm will self-recover (in auto-recovery mode) after 5 minutes from when the supply voltage is within limits. (If manual reset mode is applied, alarm can be cleared as instructed in the “Structure” section)
Troubleshooting	• Check supply voltage level across L1, L2, L3 terminals. • Make sure that you are not using a RSGD40 model on a supply voltage > 440 VAC.

Number of flashes	4
Alarm	Phase loss (motor side)
Alarm description	If any of the phases on the load (motor) side becomes open the RSGD will trip after 5 seconds to protect the motor from running / starting on 2 phases. Note: this alarm will also be triggered when a current unbalance of > 20% is detected on any of the three line currents for a minimum of 5 secs. Additionally if a SCR and/or bypass relay is open (damaged) the same alarm will be triggered.
Alarm recovery period	5 minutes
Consecutive alarms for hard reset	5
Action to recover alarm	Check connections on the output side of the soft starter and on the motor terminals. The alarm will self-recover (in Auto-recovery mode) after 5 minutes. (If manual reset mode is applied, alarm can be cleared as instructed in the “Structure” section)
Troubleshooting	• Check for any loose connections on the T1, T2, T3 side of the soft starter. • Check for any loose connections on the motor terminals. • Check motor windings.

Number of flashes	5
Alarm	Locked rotor
Alarm description	If a current ≥ 5xFLC setting for 100 msec is detected, the RSGD will issue the locked rotor alarm.
Alarm recovery period	5 minutes
Consecutive alarms for hard reset	5
Action to recover alarm	The alarm will self-recover (in Auto-recovery mode) after 5 minutes. (If manual reset mode is applied, alarm can be cleared as instructed in the "Structure" section)
Troubleshooting	• Check that FLC setting is not smaller than motor name plate current. • Check that the RSGD model is suitably rated for the motor. • Check motor windings resistance to check if motor is damaged.

Number of flashes	6
Alarm	Dry-run
Alarm description	If less than 50% of FLC current flows for 5 seconds, dry-run alarm will be triggered.
Alarm recovery period	5 minutes.
Consecutive alarms for hard reset	5
Action to recover alarm	The alarm will self-recover (in Auto-recovery mode) after 5 minutes (If manual reset mode is applied, alarm can be cleared as instructed in the "Structure" section)
Troubleshooting	• Check that the FLC setting is not too much higher than the motor name plate current. • Check motor load.

Number of flashes	7
Alarm	Over-temperature
Alarm description	The RSGD constantly measures the heatsink and thyristors (SCRs) temperature. If the maximum internal temperature is exceeded (for a minimum of 0.5 sec) an over-temperature alarm is triggered. This condition can be triggered by too many starts per hour, an over-load condition during starting and/or stopping or a high surrounding temperature.
Alarm recovery period	Depends on the cooling period. The RSGD will only recover if the internal temperature is within safe limits.
Consecutive alarms for hard reset	5
Action to recover alarm	The alarm will self-recover (in Auto-recovery mode) - the recovery period will depend on the cooling time required by RSGD. The higher the surrounding temperature, the longer the cooling period. (If manual reset mode is applied, alarm can be cleared as instructed in the "Structure" section)
Troubleshooting	• Check that the specified number of starts/hr are not exceeded. • Check that the surrounding temperature around the soft starter is within limits.

Number of flashes	8
Alarm	Overload
Alarm description	The overload alarm can be triggered in case of the following conditions: Measured current > 1.05 x FLC during transition from ramp-up to bypass. High resistance (> 1000 ohm) at P1, P2 terminals. Load current > FLC. Trip time will vary according to Trip Class 10.
Alarm recovery period	Depends on the cooling period. The RSGD will only recover if the internal temperature is within safe limits.
Consecutive alarms for hard reset	5
Action to recover alarm	The alarm will recover automatically after 5 minutes. To disable the alarm follow the procedure in the “Structure” section. Note: allow enough time for the motor to cool before attempting the next start. (If manual reset mode is applied, alarm can be cleared as instructed in the “Structure” section)
Troubleshooting	• Check that the P1, P2 terminals are shorted (unless PTC is used). • Make sure that the FLC setting is according to the current on the motor name plate. • Check for any blockages in the load. • If overload alarm occurs during ramp-up try to set a shorter ramp-up time or increase the FLC setting.

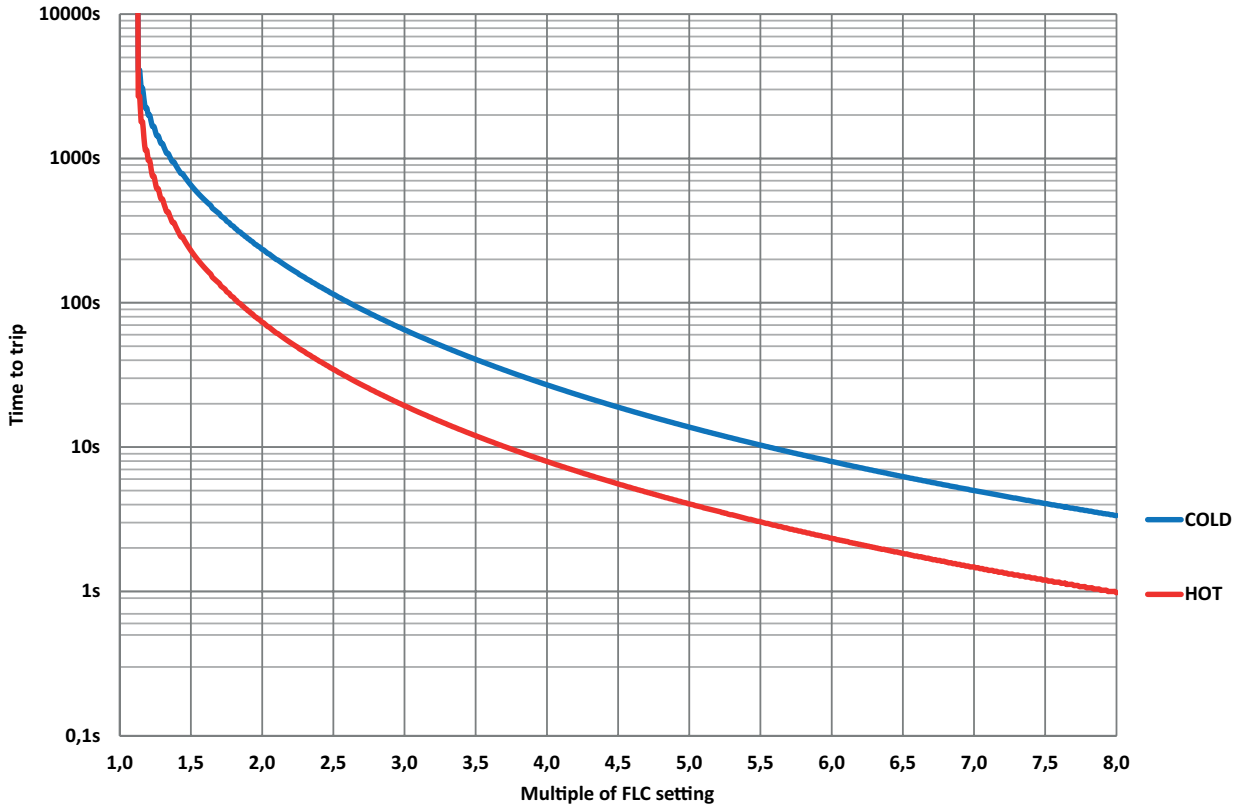

Fig. 11 *RSGD Class 10 motor overload trip profile*

Note: Applies to RSGD 75mm models only.

PTC resistance - P1, P2 connection		
< 500Ω	No Trip	Normal running
> 1000Ω	Trip	Overload alarm (8 flashes) & alarm relay activated
< 300Ω	Reset	

Number of flashes	9
Alarm	Supply voltage unbalance
Alarm description	The RSGD measures the voltages on all the three phases and if there is a difference of more than 20% for ≥ 5sec between any of the phases, the RSGD will trigger the voltage unbalance alarm.
Alarm recovery period	5 minutes
Consecutive alarms for hard reset	5
Action to recover alarm	The alarm will recover automatically after 5 minutes. (If manual reset mode is applied, alarm can be cleared as instructed in the "Structure" section)
Troubleshooting	• Check supply voltage level across L1, L2, L3 terminals. • Check connections on the L1, L2, L3 terminals.

Number of flashes	10
Alarm	Shorted thyristor (SCR)
Alarm description	In case the RSGD detects that there is a damaged (shorted) thyristor (SCR) on any of the three phases, the soft starter will trip.
Alarm recovery period	-
Consecutive alarms for hard reset	1
Action to recover alarm	Note: this alarm is not resettable and it is suggested to replace the unit and contact a Carlo Gavazzi representative should this alarm occur.
Troubleshooting	• Check resistance across L1-T1 and L3-T3 to check for any short. • If any of the SCRs is damaged, replace the soft starter.

Number of flashes	Fully ON
Alarm	Internal fault
Alarm description	In case there is an internal fault in the RSGD circuitry, the Red LED will remain continuously ON.
Alarm recovery period	-
Consecutive alarms for hard reset	1
Action to recover alarm	Note: this alarm is not resettable and it is suggested to replace the unit and contact a Carlo Gavazzi representative should this alarm occur.
Troubleshooting	• Check resistance across L1 - T1 and L3 - T3 to check for any short. • If any of the SCRs is damaged, replace the soft starter.

* Applies to RSGD 75 mm models only.

Remote reset of alarms (R1, R2)*	To reset alarms via the R1-R2 terminals you need to: Make sure that the alarm reset mode is set to MANUAL (MANUAL LED ON). To set the alarm reset mode to MANUAL press the Test/Reset button for 5 seconds when the RSGD is in IDLE mode. When RSGD is in alarm mode, short the terminals R1, R2 for 1 second. This will clear the alarm and RSGD will go to IDLE state. Note: do not apply voltage on R1, R2 terminals as this might damage the soft starter.

Short circuit protection

Type 1 protection implies that after a short circuit, the device under test will no longer be in a functioning state.
The product variants listed in the table hereunder are suitable for use on a circuit capable of delivering not more than 5,000* symmetrical Amperes, 400 or 600 Volts maximum when protected by fuses. Tests at 5,000 A* were performed with Class RK5 fuses, fast acting; please refer to the table below for maximum allowed ampere rating of the fuse. Use fuses only.
* For RSGD 70 to RSGD 100 models 10,000 symmetrical Amperes apply.

Note: For fuse size of 600A or less, Class CC, G, H, K, J, RK1 or T fuses can be used instead of RK5 fuses.

Time delay fuses (UL 508)

Item No.	Max. fuse size [A]	Current [kA]	Class	Max. voltage [VAC]
RSGD..12	15	5	RK5	600
RSGD..16	20			
RSGD..25	25			
RSGD..32	50			
RSGD..45	50			
RSGD..55	60			
RSGD..70	100	10		
RSGD..85				
RSGD..100				

Manual motor starters

Item No.	Model No.	Current [kA]	Max. voltage [VAC]
RSGD..12	GMS32H-17	10	400
RSGD..16	GMS32H-17		
RSGD..25	GMS32H-32		
RSGD..32	GMS32H-32		
RSGD..45	GMS63H-50		
RSGD..55	GMS63H-63		
RSGD..70	GMS100H-75		
RSGD..85	GMS100H-100		
RSGD..100	GMS100H-100		

Note: products protected with manual motor starters must be wired with a minimum length of 2.0 m (10.0 m for 12, 16 A models) of Cu wire conductor with a maximum cross-sectional area of 2.5 mm^2 for 12 Arms and 16 Arms devices, 10 mm^2 for 25, 32, 45 Arms devices, 16 mm^2 for 55 Arms devices and 50mm^2 for higher currents. The length includes the conductors from the voltage source to the manual motor starter to the soft starter and from the soft starter to the load.

COPYRIGHT ©2026
Content subject to change.
Download the PDF: www.gavazziautomation.com