Smart Power Supply and UPS
Type SPUBC 120W

- **Single phase input range 115 to 277VAC**
- **Smart power management**
- **Rated output of 10A (12V) or 5A (24V)**
- **Output current boost of 2In**
- **Suitable for Lead Acid open or sealed, Lead gel**
- **Automatic Battery diagnostic and battery care**
- **Boost, Trikle/float and recovery charging cycles.**
- **Battery reversed polarity, element short circuit or disconnection**
- **2 relay outputs for remote status and operation indication**
- **cURus recognized and CE approved**

Product Description

The new Carlo Gavazzi SPUBC puts you in the driving seat of your power management requirements, allocating power, in the most efficient way, between the load and the battery.The maximum available current for battery charging is set by means of a front trimmer. It can go from 20% to 100%, which means that it possible to charge with up to 5A. The priority though is always the load. If the load requires 80% of current, the current available for the battery is only the remaining 20% regardless of the setting.
The SPUBC comes with 12VDC and 24VDC options, which allows a rated current of 10A and 5A respectively. SPUBC implements a comprehensive process called “Battery Care” that applies algorithms to obtain rapid and automatic charging, battery charge optimization over time, flat battery recovery and real time diagnostic during installation and operation. The Real Time auto-diagnostic system, monitors battery faults such as battery sulphatation, elements in short circuit, accidental reverse polarity connection and battery disconnection or bad connection. All these can be easily detected and removed during installation and operation by the “diagnostic LED” Blinking Code. Continuous battery efficiency monitoring, reduces battery damage risk and allows safe operation in permanent connection.
This device is suitable for a selection of most common battery types.
By means of built in jumpers it is possible to set preset curves.
They are programmed for two charging levels, boost and float/trikle, but can be changed to single charging level by the user.
In addition to the SPUBC, Carlo Gavazzi, also provides a selection of Racks for DIN rail mounting of the battery, with battery included upon request from 1.2Ah up to 12Ah capable of providing, depending upon load, from a few minutes to several hours of charge reserve.

Approvals

Ordering Key

SPUBC 24 120

Power supply UPS battery charger
Battery and Output Voltage Vdc
Output power W

AVAILABLE MODELS	INPUT VOLTAGE	MAX. OUTPUT POWER	OUTPUT VOLTAGE	MAX. OUTPUT CURRENT
SPUBC12120	115 ~ 277 VAC 90 ~ 305 VAC	120 WATTS	12 VDC	10 A
SPUBC24120			24 VDC	5 A

Output Data

Output voltage	12 VDC / 24 VDC
Nominal current	10 A / 5 A
Rated output current	10 A / 5 A
Efficiency (@50% of rated current)	≥90%
Turn on delay	1S (Max)
Max Capacitive load startup	Unlimited

Power dissipation @ Max. Load	17W
Short circuit protection	Yes
Over load protection	Yes
Overvoltage output protection	Yes (typ. 35Vdc)
Thermal protection	Yes

CARLO GAVAZZI

Input Data

Nominal input voltage	115 ~ 277 VAC, 90~305 VAC	**Frequency**	47 ~ 63 Hz
Voltage range	90 ÷ 305VAC	**Input current (115 - 230VAC)**	2.8 ~ 1.3 A
Inrush current (Vn - In nom. Load) I²t	≤ 11A ≤ 5ms	**Internal fuse** (not replaceable)	4A
		External fuse MCB curve B	10A

General Data

Insulation voltage		**Dimensions W x H x D**	65 x 115 x 135mm
IN / OUT	3000 VAC	**Weight**	0.6kg approx.
IN / GND	1605 VAC	**Operating temperature**	-25°C ~ 70°C
OUT / GND	500 VAC	**Derating Tᵃ >50°C**	-2.5% (In)/°C
Protection Degree EN/IEC 60529	IP20	**Storage temperature**	-40°C ~ +85°C
Pollution degree	2	**Ambient Humidity**	RH 95% not condensing
Connection wires size	2.5mm (24-14AWG)	**Cooling**	Natural air flow, convection
Protection class (with PE connected)	I (IEC61140)		

Battery Charger (@ 25°C Ambient, Inom)

Boost charge	14.4VDC (12 VDC)	**Charging current Adjustment**	20 ~ 100% Inom
	28.8VDC (24 VDC)	**Reverse battery protection**	Yes
Max. Boost charge duration	15h	**Sulfated battery check**	Yes
Min. duration boost charge	1min.	**Detection of battery element in short circuit**	Yes
Trickle charge	13.75VDC (12 VDC)	**MTBF IEC 61709**	> 300.000h
	27.5VDC (24 VDC)	**Quiescent current**	≤100mA (12 VDC),
Recovery charge	2 ~ 16Vdc		≤5mA (24 VDC)
Max. Charging current	2~9VDC (12 VDC) 2~16VDC (24 VDC) 10A ±5% (12 VDC) 5A ±5% (24 VDC)	**Charging Profile**	3 stage
		Remote input control	Boost / Trickle

Power Supply Output (@ 25°C Ambient, Inom)

Output voltage	10 ~ 14.4VDC (12 VDC)	**Continuos current (with battery)**	20A (12 VDC) 10A (24 VDC)
	22 ~ 28.8 VDC (24 VDC)	**Max current output load**	30A x 4s (12 VDC)
Output Current	1.1 x I_{nA} ±5%		15A x 4s (24 VDC)
Continuos current (without battery)	10A (12 VDC)	**Total discharge protection**	9~10VDC (12 VDC)
	5A (24 VDC)		19~20VDC (24 VDC)
		Flat battery alarm	10~11VDC (12 VDC) 20~21VDC(24 VDC)

Signal Outputs

Mains or backup power	Yes	**Relay outputs**	
Low battery	Yes	Type	2 x SPDT
Battery fault	Yes	Max. AC Load AC1	1A @ 60Vac
		Max. DC Load DC1	1A @ 30Vdc
		Min. Load	1mA @ 5Vdc

Signal Port RJ45 (RJ 45 Auxiliary Output behind the label; remove the window label to find the connector)

Battery temp. Compensation	Yes. It is possible connect a temperature sensor, for ambient temperature charging compensation.	**Can Bus**	No
Remote monitoring display	Yes. It is possible connect an external display to remote N° 3 led of the internal device.		

Specifications are subject to change without notice 22/07/2026

Signals and Terminals

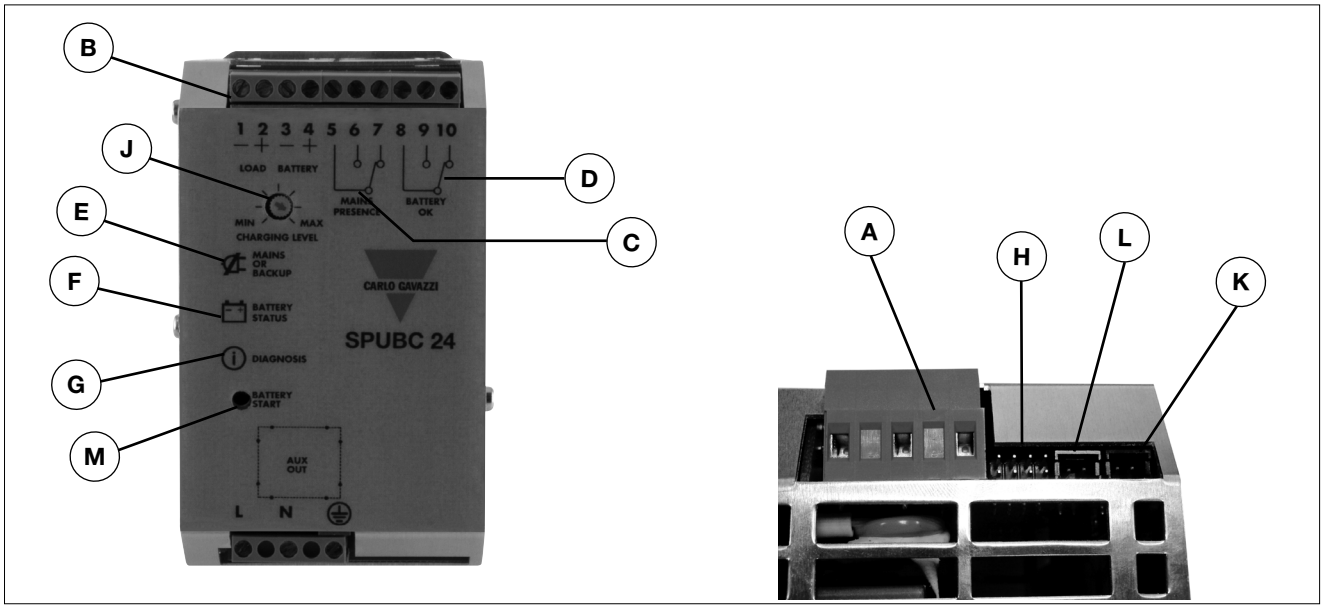

A: Mains Terminals (input)
B: Battery and load terminals
C: Backup mode output
D: Battery status output
E: Backup mode LED
F: Battery status LED
G: Diagnosis LED
H: Battery configuration jumpers
J: Charging level adjustment (from 20 to 100%)
K: Fast charge enabling jumper
L: Remote battery start
M: Local battery start

Output Power Connections

Normal connection

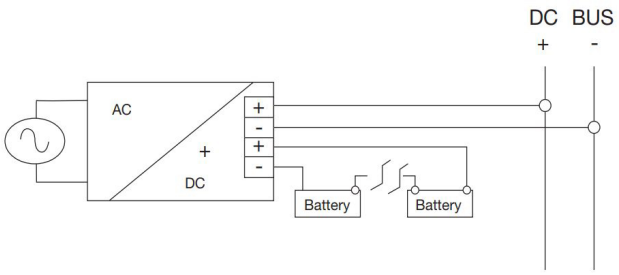

Parallel connection "Redundancy"

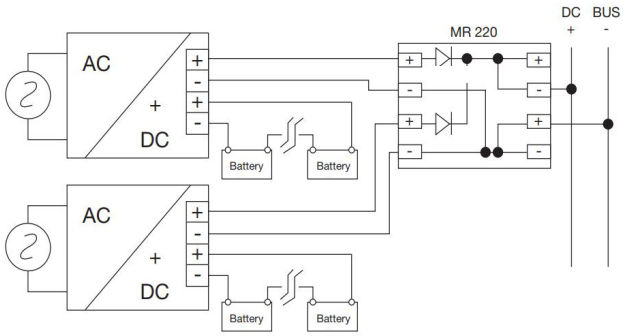

Series connection

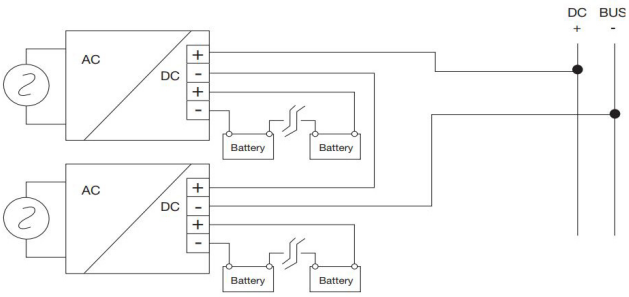

Buffering Time / Battery Capacity

Load \ Battery capacity	1.2Ah SPUBATxx1A2	3.2Ah SPUBATxx3A2	7.2Ah SPUBATxx7A2	12Ah SPUBATxx12	100Ah
1.5A	20’	60’	200’	400’	-
3A	8’	30’	120’	240’	-
5A	3’	15’	55’	100’	-
7.5A	2’	10’	30’	60’	-
10A	no	7’	20’	45’	6h

Accessories

Ordering Code	Description	Type	Voltage	Battery Capacity	Max. Charging current	Weight	Width mm	Height mm	Depth mm
SPUBAT241A2	DIN Rail Rack with 1.2Ah Battery	Lead Acid VRLA	24V	1.2Ah	0.3A	1.5kg	62	185	120
SPUBAT243A2	DIN Rail Rack with 3.2Ah Battery	Lead Acid VRLA	24V	3.2Ah	0.8A	3kg	82	200	160
SPUBAT247A2	DIN Rail Rack with 7.2Ah Battery	Lead Acid VRLA	24V	7.2Ah	1.7A	5.5kg	145	210	130
SPUBAT1A2	Empty DIN Rail Rack for 1.2Ah Battery	-	12V or 24V	Designed for 1.2Ah	-	?	62	175	120
SPUBAT3A2	Empty DIN Rail Rack for 3.2Ah Battery	-	12V or 24V	Designed for 3.2Ah	-	?	82	200	160
SPUBAT7A2	Empty DIN Rail Rack for 7.2Ah Battery	-	12V or 24V	Designed for 7.2Ah	-	?	145	210	130
SPUBAT12	Empty DIN Rail Rack for 12Ah Battery	-	12V or 24V	Designed for 12Ah	-	?	210	210	210

COPYRIGHT ©2026
Content subject to change
Carlo Gavazzi Controls S.p.A. Viale De Gasperi 31, 20045 Lainate, Italy
Download the PDF: https://gavazziautomation.com